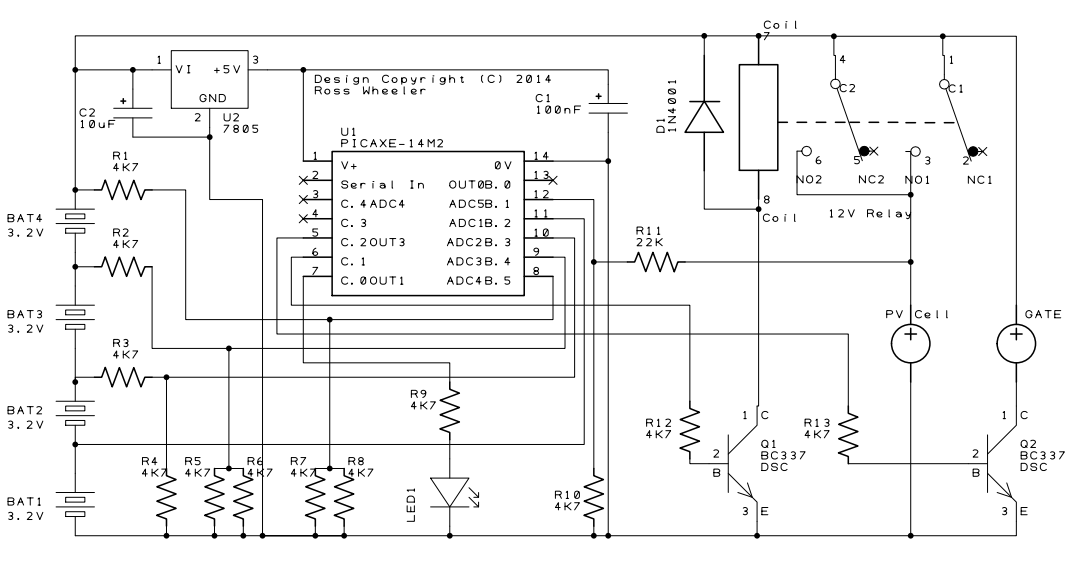
Design Copyright (C) 2014
Ross Wheeler
U1
PICAXE-14M2
V+
Serial In
C.4 ADC4
C.3
C.2 OUT3
C.1
C.0 OUT1
0V
OUT0 B.0
ADC5 B.1
ADC1 B.2
ADC2 B.3
ADC3 B.4
ADC4 B.5
U2
7805
VI
+5V
GND
C2
10uF
C1
100nF
R1
4K7
R2
4K7
R3
4K7
R4
4K7
R5
4K7
R6
4K7
R7
4K7
R8
4K7
R9
4K7
R10
4K7
R11
22K
R12
4K7
R13
4K7
BAT4
3.2V
BAT3
3.2V
BAT2
3.2V
BAT1
3.2V
LED1
D1
1N4001
Coil
Coil
12V Relay
NO2
NC2
NO1
NC1
C2
C1
PV Cell
GATE
Q1
BC337
DSC
Q2
BC337
DSC
C
B
E